Data current as of: 29-11-2026 10:59

Link to the product: https://www.4sauna.com/steam-generator-heater-heating-element-harvia-zg-365-5000w-hgx-15-p-36.html

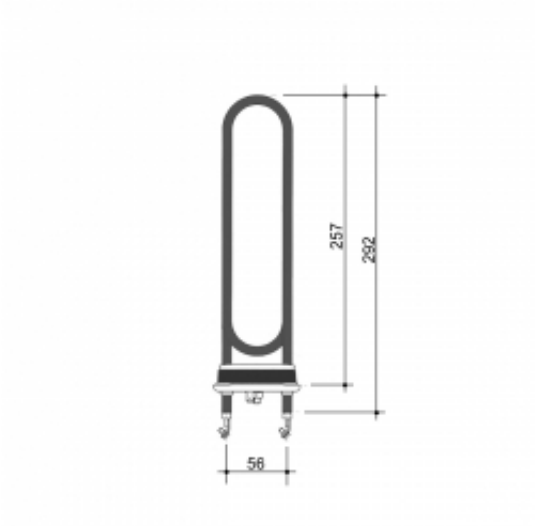

Heating element ZG-365 (5000W)

Price with TAX	**51.00 Euro**
Price	**51.00 Euro**
Availability	**Always on stock**
Shipping time	**24 hours**
Producer code	**ZG-365**

Product description

Heater for steam generators Harvia: HGX15

This product has additional options:

Power (W): 5000
Feature: Water heating

Quality & Origin

This product belongs to the 4sauna "OEM Quality – Made in Poland" series. It is equipped with premium heating coils from world-class European suppliers (Backer/Selfa), ensuring maximum safety and durability in professional and home saunas.

Harvia Heater Models & Element Heating

Element Heating	Harvia Heater Models
ZSI-200	Alfa A30
ZSN-150	Delta D23(E, EE), D29(EE)
ZSN-160	Delta D29(EE), D36(E, EE)
ZSC-360	Unio HNK360(E,EE), Cilindro PC110E/EE/HEE
Y10-0016	The Wall SW45(E)
Y10-0015	The Wall SW60(E)
Y10-0014	The Wall SW80(E)
ZCU-830	The Wall SW90(E), The Wall Combi SW90(S/SA), Virta HL90, Virta Combi HL90S(A), Virta Pro HL160, Virta Pro Combi HL160SA, Modulo 160, 180
ZCU-823	The Wall Combi SW45S/SA, SW70S/SA, Virta HL70, Virta Combi

	HL70S(A), Virta Pro HL135, HL160, Virta Pro Combi HL135SA, HL160SA, Modulo 135, 160
ZSJ-100	Compact JM20(E), JM25(E)
ZSJ-110	Compact JM25(E), JM30(E)
ZSB-770	Vega Compact BC23(E), BC35(E)
ZSB-224	Vega BC45(E)
ZSB-226	Vega BC60(E), Vega Combi BC60SE(A)
ZSB-228	Vega BC80(E)
ZSB-229	Vega BC90(E), Vega Combi BC90SE(A)
ZSB-461	Vega Pro BC105, BC135
ZSB-462	Vega Pro BC135, BC165
ZSK-690	KIP30(E), KIP45(E), Topclass KV30(E), KV45(E), Sound / Steeltop M45(E), Moderna V45E, Topclass Combi KV50SE(A)
ZSK-700	KIP60(E), Topclass KV60(E), Sound / Steeltop M60(E), Moderna V60E, Topclass Combi KV60SE(A), Classic Electro CS60
ZSK-710	KIP80(E), Topclass KV80(E), Sound / Steeltop M80(E), Moderna V80E, Topclass Combi KV80SE(A), Classic Electro CS80
ZSK-720	KIP90(E), Sound / Steeltop M90(E), Topclass Combi KV90SE(A)
ZSE-256	Fuga FU60(E)
ZSE-259	Fuga FU90(E), Figaro FG90(E), Quatro QR90, Cilindro PC90(E,H,F,EE,HEE), Cilindro Plus PP90(E), Glow TRT90(E), TRC90(E)
ZRH-247	Kivi PI70(E)
ZRH-249	Kivi PI90(E)
ZRH-720	Figaro FG70(E), Quatro QR70, Cilindro PC70(E,H,F,EE,HEE), Cilindro Plus PP70(E), Glow TRT70(E), TRC70(E)
ZSC-022	Cilindro PC66(E), Cilindro Pro PC100E, PC135E, PC165E, PC200E, Modulo MDA165, MDA200
ZVO-201	Globe GL70(E)
ZVO-200	Globe GL110(E)
ZCU-836	Virta HL110, Virta Combi HL110S(A), Virta Pro HL220, Virta Pro Combi HL220SA
ZSP-240	Legend PO11, Club K11G(S)
ZSS-110	Legend PO11, Senator T9, T10.5, Senator Combi T7C(A), T9C(A), Elegance F10.5, Club K11G(S)
ZSS-120	Senator T10.5, Senator Combi T7C(A), T9C(A), Elegance F10.5, Club K13.5G(S)
ZSP-250	Legend PO165, Elegance F15, F16.5, Club K13.5G, K15G, Club Combi K13.5GS, K15GS
ZSP-255	Legend PO165, Elegance F16.5, F18
ZSA-430	Symphony AV4, AV6,
ZSA-420	Symphony AV2-6
ZSF-20	Forte AF4 / AFB4
ZSF-30	Forte AF6 / AFB6
ZSF-50	Forte AF9 / AFB9
ZSL-313	Club K9, K10.5, K12, Profi L26
ZSL-310	Club K9, Profi L23
ZSL-316	Club K12
ZSL-314	Club K15, Profi L23, L26, L30
ZSK-732	Profi L20
ZSL-318	Profi L33
ZHH-170	Hidden Heater HH6, HH12
ZHH-180	Hidden Heater HH9
ZH-104	Steamer SS20 and for all Steamers in Combi heaters except Vega Combi
ZSB-571	Vega Combi Steamer