Data current as of: 24-11-2026 17:12

Link to the product: https://www.4sauna.com/steam-generator-heater-element-zg-340-1900w-hgx-60-hgs-p-33.html

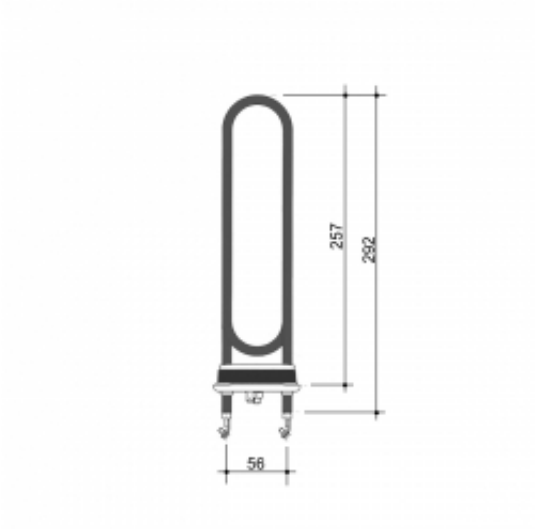

Heating element ZG-340 (1900W)

Price with TAX	**49.00 Euro**
Price	**49.00 Euro**
Availability	**Always on stock**
Shipping time	**24 hours**
Producer code	**ZG-340**

Product description

Heating element for:
Harvia HGX60
Harvia HGS60

We sell sauna heaters of only the highest quality, exclusively from European manufacturers. Our range does not include Chinese heaters with characteristic flattening at their bends. Manufacturers such as Backer OBR or Loval belong to a group of heater manufacturers producing for Narvi, Helo, Tylo, Harvia. All offered heaters are available immediately.
We have an interesting pricing offer for hotels, resorts, spas, and service providers!

This product has additional options:

Power (W): 1900
Feature: Water heating

Quality & Origin

This product belongs to the 4sauna "OEM Quality – Made in Poland" series. It is equipped with premium heating coils from world-class European suppliers (Backer/Selfa), ensuring maximum safety and durability in professional and home saunas.

Harvia Heater Models & Element Heating

Element Heating	Harvia Heater Models
ZSI-200	Alfa A30
ZSN-150	Delta D23(E, EE), D29(EE)
ZSN-160	Delta D29(EE), D36(E, EE)
ZSC-360	Unio HNK360(E,EE), Cilindro PC110E/EE/HEE

Y10-0016	The Wall SW45(E)
Y10-0015	The Wall SW60(E)
Y10-0014	The Wall SW80(E)
ZCU-830	The Wall SW90(E), The Wall Combi SW90(S/SA), Virta HL90, Virta Combi HL90S(A), Virta Pro HL160, Virta Pro Combi HL160SA, Modulo 160, 180
ZCU-823	The Wall Combi SW45S/SA, SW70S/SA, Virta HL70, Virta Combi HL70S(A), Virta Pro HL135, HL160, Virta Pro Combi HL135SA, HL160SA, Modulo 135, 160
ZSJ-100	Compact JM20(E), JM25(E)
ZSJ-110	Compact JM25(E), JM30(E)
ZSB-770	Vega Compact BC23(E), BC35(E)
ZSB-224	Vega BC45(E)
ZSB-226	Vega BC60(E), Vega Combi BC60SE(A)
ZSB-228	Vega BC80(E)
ZSB-229	Vega BC90(E), Vega Combi BC90SE(A)
ZSB-461	Vega Pro BC105, BC135
ZSB-462	Vega Pro BC135, BC165
ZSK-690	KIP30(E), KIP45(E), Topclass KV30(E), KV45(E), Sound / Steeltop M45(E), Moderna V45E, Topclass Combi KV50SE(A)
ZSK-700	KIP60(E), Topclass KV60(E), Sound / Steeltop M60(E), Moderna V60E, Topclass Combi KV60SE(A), Classic Electro CS60
ZSK-710	KIP80(E), Topclass KV80(E), Sound / Steeltop M80(E), Moderna V80E, Topclass Combi KV80SE(A), Classic Electro CS80
ZSK-720	KIP90(E), Sound / Steeltop M90(E), Topclass Combi KV90SE(A)
ZSE-256	Fuga FU60(E)
ZSE-259	Fuga FU90(E), Figaro FG90(E), Quatro QR90, Cilindro PC90(E,H,F,EE,HEE), Cilindro Plus PP90(E), Glow TRT90(E), TRC90(E)
ZRH-247	Kivi PI70(E)
ZRH-249	Kivi PI90(E)
ZRH-720	Figaro FG70(E), Quatro QR70, Cilindro PC70(E,H,F,EE,HEE), Cilindro Plus PP70(E), Glow TRT70(E), TRC70(E)
ZSC-022	Cilindro PC66(E), Cilindro Pro PC100E, PC135E, PC165E, PC200E, Modulo MDA165, MDA200
ZVO-201	Globe GL70(E)
ZVO-200	Globe GL110(E)
ZCU-836	Virta HL110, Virta Combi HL110S(A), Virta Pro HL220, Virta Pro Combi HL220SA
ZSP-240	Legend PO11, Club K11G(S)
ZSS-110	Legend PO11, Senator T9, T10.5, Senator Combi T7C(A), T9C(A), Elegance F10.5, Club K11G(S)
ZSS-120	Senator T10.5, Senator Combi T7C(A), T9C(A), Elegance F10.5, Club K13.5G(S)
ZSP-250	Legend PO165, Elegance F15, F16.5, Club K13.5G, K15G, Club Combi K13.5GS, K15GS
ZSP-255	Legend PO165, Elegance F16.5, F18
ZSA-430	Symphony AV4, AV6,
ZSA-420	Symphony AV2-6
ZSF-20	Forte AF4 / AFB4
ZSF-30	Forte AF6 / AFB6
ZSF-50	Forte AF9 / AFB9
ZSL-313	Club K9, K10.5, K12, Profi L26
ZSL-310	Club K9, Profi L23
ZSL-316	Club K12
ZSL-314	Club K15, Profi L23, L26, L30
ZSK-732	Profi L20
ZSL-318	Profi L33
ZHH-170	Hidden Heater HH6, HH12
ZHH-180	Hidden Heater HH9
ZH-104	Steamer SS20 and for all Steamers in Combi heaters except Vega Combi
ZSB-571	Vega Combi Steamer